(No Model.)

V. C. KILLIN.

ARC LAMP.

No. 388,053. Patented Aug. 21, 1888.

FIG. 1.

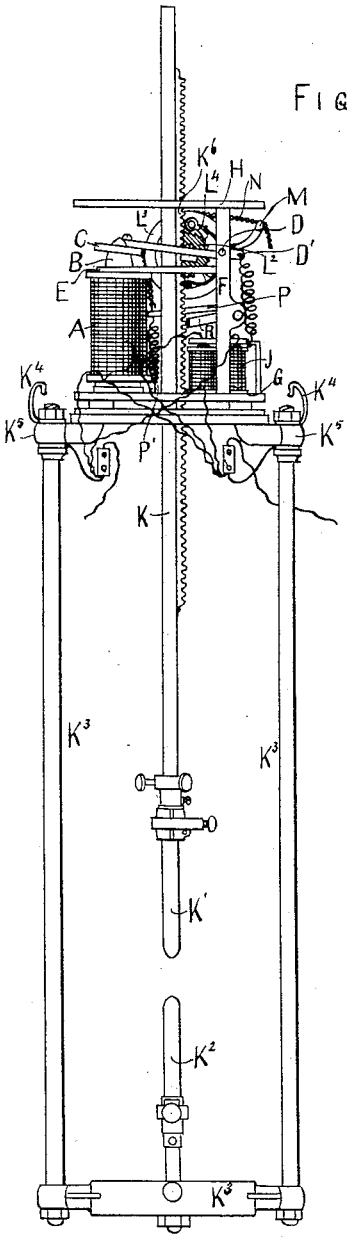

FIG. 2.

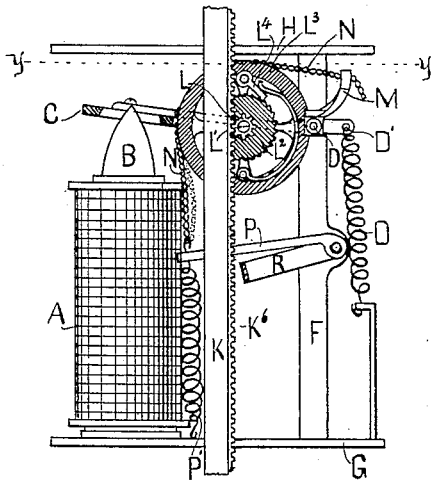

FIG. 3.

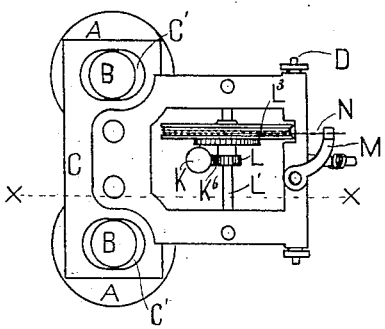

Witnesses:—

Marian D. Thatcher.

Cora L. Wadwallader,

Inventor:

Virgil C. Killin.

By Francis W. Parker.

Atty.

UNITED STATES PATENT OFFICE.

VIRGIL C. KILLIN, OF CHICAGO, ILLINOIS.

ARC LAMP.

SPECIFICATION forming part of Letters Patent No. 388,053, dated August 21, 1888.

Application filed March 24, 1888. Serial No. 268,421. (No model.)

To all whom it may concern:

Be it known that I, VIRGIL C. KILLIN, a citizen of the United States, residing at Chicago, county of Cook, and State of Illinois, have invented a new and useful Arc Lamp, of which the following is a specification.

My invention relates to arc lamps, and particularly to devices for holding and feeding the carbons, and has for its object to provide means whereby the upper carbon may be more accurately fed. These objects I accomplish by means of the device illustrated in the accompanying drawings, wherein—

Figure 1 is a side view of an arc lamp fitted out with my appliance. Fig. 2 is a detail sectional view on the line *x x*. Fig. 3 is a horizontal section on the line *y y*.

Like parts are indicated by the same letter in all the figures.

A A are the spools of an electro-magnet; B, the projecting conical cores thereof.

C C is an armature, provided with the apertures C′ C′, which receives the cores B B and which is hinged or pivoted on the rod D and is provided with the rearward projection, D′.

E is a cross-piece which supports the two spools, and is attached at the rear to the side frame-pieces, F F. These side frame-pieces, together with the base-board G and the top H, constitute the frame which contains the mechanism.

All the parts will be inclosed by a drum or cylinder, which is not here shown.

A A are the magnet-spools, which are wound in any desired manner as in the various ways now employed.

J is a cut-out electro-magnet, which is no part of my present invention.

K is the rod which carries the upper carbon, K′.

K^2 is the lower carbon, and K^3 K^3 the rods which form the carbon-supporting frame. K^4 K^4 are hooks for suspending the same.

K^5 K^5 are the binding-posts.

K^6 is a rack on or continuous with the rod K and meshing with the pinion L, which is rigid with the shaft L′. On this shaft is the ratchet-wheel L^2 and the loose pulley L^3, carrying the spring-dog L^4, whereby the loose pulley may be locked to the shaft when the latter rotates toward the left.

M is a standard on the armature, to which is tightly secured the link chain N, which passes around the pulley L^3.

O is a spiral spring. The rod L′ is journaled upon the armature C. The rear end of the armature is depressed by means of the spiral spring O. Secured to the frame is the pivoted arm P, downwardly held by the spiral spring P′ and upwardly drawn by means of the chain N, which is secured to its outer extremity.

R is a stop on the frame which limits the downward motion of the arm P.

The magnet is in the shunt-circuit in the usual manner.

The use and operation of my invention are as follows: With a variation of the current passing through the electro-magnet A A the long end of the armature C is moved vertically. This motion of the armature is employed in my device to free the shaft L′ from the pulley L^3, and thus permit the rod K to descend. The rod K may be raised to its greatest height without difficulty, as when moving in this direction the pulley L^3 is not locked to the shaft, but the shaft is free to move. It is only in the descent of the rod K that it is necessary to regulate its action. Now, when the arc is broken by the separation of the carbons, the current through the electro-magnet A A becomes stronger. The armature C is pulled downwardly. This causes the pulley and all its parts to descend also, as they are all suspended on the armature. Thus the lower carbon is lowered. At the same time the arm P is permitted to descend. This process may continue until the arm P is arrested by the stop R, whereupon the further continuance of the motion will slacken the chain N, as indicated in Fig. 2, its under portion resting upon the arm R. Thus the friction of said chain upon the pulley L^3 is relieved and the latter is permitted to rotate slightly. Thus the weight of the upper carbon and its supporting-rod is employed to lower it.

In practice this operation is found to be very delicate, though certain, and the upper carbon is steadily and positively fed to a point where a suitable arc is constantly maintained. It will be observed, also, that the carbons are never permitted to remain in close contact with each other, as when the armature C is elevated the friction on the pulley L^3 of the chain

N will not permit the rod K and its carbon to descend; but when the armature C is depressed and the friction relieved the rod K can descend. If, now, it descends until the carbons are in contact, the current is then so weak through the spools A A that the armature is released and permitted to raise itself; but by this movement it also raises the rod K and its carbon K′.

Having thus described my invention, what I claim, and desire to secure by Letters Patent, is as follows:

In an arc lamp, a carbon-feeding device consisting of a rack upon the carbon rod, a pinion meshing therewith, a shaft carrying such pinion, a ratchet-wheel on the shaft, a friction-pulley loose on such shaft, but secured thereto by a dog which engages the ratchet-wheel, said shaft with pinion-pulley and ratchet-wheel journaled upon a lever-armature which is pivoted at one side of the carbon rod and at one end suspended over the electro-magnet core and at the other influenced by a counter-spring, a friction-chain about such pulley, fixedly held at one end and at the other secured to a pivoted arm which is downwardly drawn by a spiral spring, and a stop which engages such arm when the armature has descended a certain distance, the engagement of said arm loosening the chain on said pulley, and thus permitting the carbon rod to descend until the current passing through the carbons weakens the current through the electro-magnet and permits the armature to rise until the chain again grasps the pulley.

VIRGIL C. KILLIN.

Witnesses:
CORA L. CADWALLADER,
MARIAN THATCHER.