(No Model.)

L. N. P. POLAND.

ARC LIGHT.

No. 378,616. Patented Feb. 28, 1888.

Fig. 1.

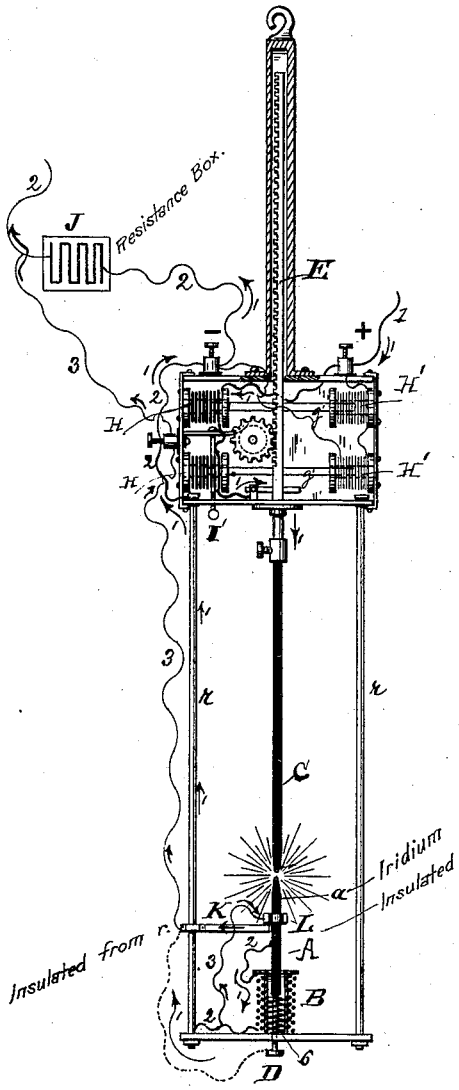

Fig. 2.

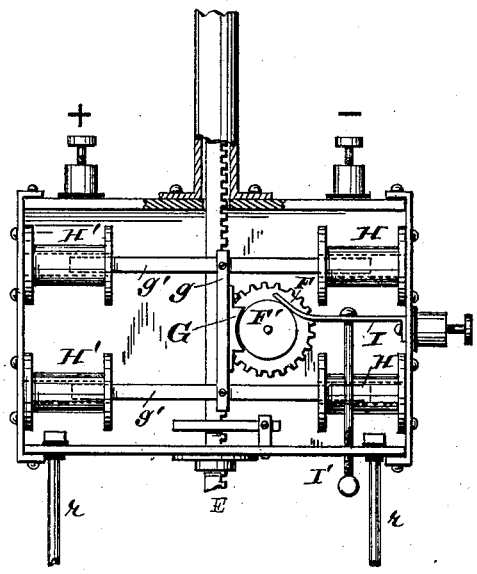

Witnesses
A. S. Mabs
Mary E. Murray

Inventor,
Lawrence N. P. Poland,
By his Attorney Geo. F. Murray

UNITED STATES PATENT OFFICE.

LAWRENCE N. P. POLAND, OF CINCINNATI, OHIO.

ARC LIGHT.

SPECIFICATION forming part of Letters Patent No. 378,616, dated February 28, 1888.

Application filed April 21, 1887. Serial No. 235,592. (No model.)

To all whom it may concern:

Be it known that I, LAWRENCE N. P. POLAND, a citizen of the United States, and a resident of Cincinnati, in the county of Hamilton and State of Ohio, have invented certain new and useful Improvements in Electric-Arc Lamps, of which the following is a specification.

My invention is an improved electric-arc lamp. Its objects are, first, to provide a means by which the resistance turned in is equal to the resistance of the lamp, so that the lamps may be used in the same line with incandescent lamps or alone, and whether used in arc lines alone or in lines having both arc and incandescent lamps, to provide for preventing the low resistance at the beginning which burns out arc armatures, and, second, to provide means by which an incombustible negative electrode may be used, whereby the lamp is made focusing without complicated mechanism for effecting this result.

The invention will be first fully described in connection with the accompanying drawings, in which like parts are marked by the same reference-letters in the different views, and then particularly referred to in the claims.

In the drawings, Figure 1 is a view, partly in side elevation and partly in central vertical section, of a lamp embodying my improvements. Fig. 2 is a similar view, upon an enlarged scale, of the upper part of the lamp, looking from the opposite side.

The negative electrode *a* of this lamp is made of a piece of iridium or other non-combustible substance held in an iron holder, A, which moves up and down in a solenoid, B, at the bottom of the lamp. A spring, *b*, within the solenoid B holds the negative electrode up in contact with the positive electrode C until the current passing through the lamp magnetizes the solenoid B, when the negative electrode is pulled down, forming the arc, the length of which is regulated by the screw D at the bottom of the lamp.

The positive electrode C, which is of carbon, is carried by a holder, E, the upper part of which is a toothed rack fitted to slide in guides supported by the frame. The teeth of the rack mesh into the teeth of a cog-wheel, F, mounted upon a shaft which has its bearings in the frame. The cog F has cast, as part of it, a smooth-faced pulley, F′, which is pressed by a brake, G, attached to and held in position by the vertical piece *g*, which is secured to the iron rods *g′ g′*, which move in the two sets of solenoids H and H′. When the arc is formed, the main solenoids H H pull the brake G against the periphery of wheel F′, and by preventing the holder E from moving, thus keep the carbon in place. As the carbon burns away, the resistance of the lamp increases, and the shunt-solenoids H′ H′, becoming stronger, release the brake, allowing the carbon to descend until the resistance becomes that determined on, when the main solenoids H H again stop the descent. The descent of the positive electrode is regulated in speed by a spring, I, which presses on the wheel F′. The pressure of the spring is regulated by a screw-rod, I′.

The positive wire *l* connects with the positive electrode in the usual manner. The main negative wire 2 has a resistance-box, J, which may be of any approved construction, interposed. The current at first runs through this resistance-box and the lamp, the wire 2 making connection with one of the frame-rods *r*, and thence through solenoid B and the negative holder A; but when the arc is formed the negative electrode, dropping down and resting on the screw D, brings the piece L in contact with piece K, thus through wire 3 short-circuiting the resistance-box. The pieces K and L are insulated from the frame-rod *r* and the negative holder A. It is obvious that the wire 3, instead of connecting with the negative electrode through pieces K and L, may be brought down and connected directly to the screw D at the bottom of the lamp, as shown in dotted line.

There is to be a resistance-box for each arc lamp used, whether used in lines with incandescent lamps or the arc lamps are used alone. Should the lamp by any means short-circuit, any well-known automatic cut-out may be employed to break the circuit.

I claim—

1. The combination of the solenoid B, the negative-electrode holder controlled by said solenoid and carrying a contact-maker, a spring to hold the negative electrode up until the arc is formed, a resistance placed in the line of the main negative, the short-circuit wire 3 and its contact-point arranged in the path of the con-

tact-maker controlled by said negative-electrode holder, so that the resistance is short-circuited when the arc is formed, substantially as hereinbefore set forth.

2. The combination, substantially as set forth, of the positive-electrode holder, a brake actuated by the main and shunt solenoids for controlling its movements, the solenoid B and negative-electrode holder forming the arc of said solenoid carrying a contact-maker, a spring within said solenoid B, to close the arc, a regulating-screw to determine the length of the arc, a resistance placed in the main negative line, a short-circuit wire having a contact-point to be brought in electrical connection with the negative electrode contact-maker when the arc is formed, and thus short-circuit the resistance-box.

3. In an electric-arc lamp of the character described, the combination of the toothed holder E, the main solenoids and shunt solenoids arranged opposite each other, the cog F, meshing with the toothed holder, the brake-wheel F′, the brake G *g*, and brake-rods *g′ g′*, the opposite ends of which are the cores of the opposite solenoids, the solenoid B at the bottom of the lamp, the incombustible negative electrode, the negative-holder A, and spring within solenoid B, to hold it up, a regulator to determine the length of the arc, the resistance J in the main negative line, the short-circuit wire 3, and the contact-pieces K and L, to short-circuit the resistance when the arc is formed.

4. In an electric line having lamps arranged as described, the resistance-box J, interposed in the negative line of each arc lamp, a short-circuit wire and its contact-point, and the movable negative electrode carrying a contact-maker, to be brought in electrical connection with the short-circuit wire and cut out the resistance-box when the arc is formed, substantially as described.

LAWRENCE N. P. POLAND.

Witnesses:
GEO. J. MURRAY,
MARY L. MURRAY.